SWITCHMIX

SWITCHMIX SHOWER / BATH DIVERTER MIXER ROUGH-IN KIT - LEAD FREE

SPECIFICATIONS

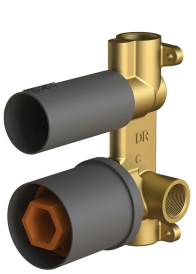

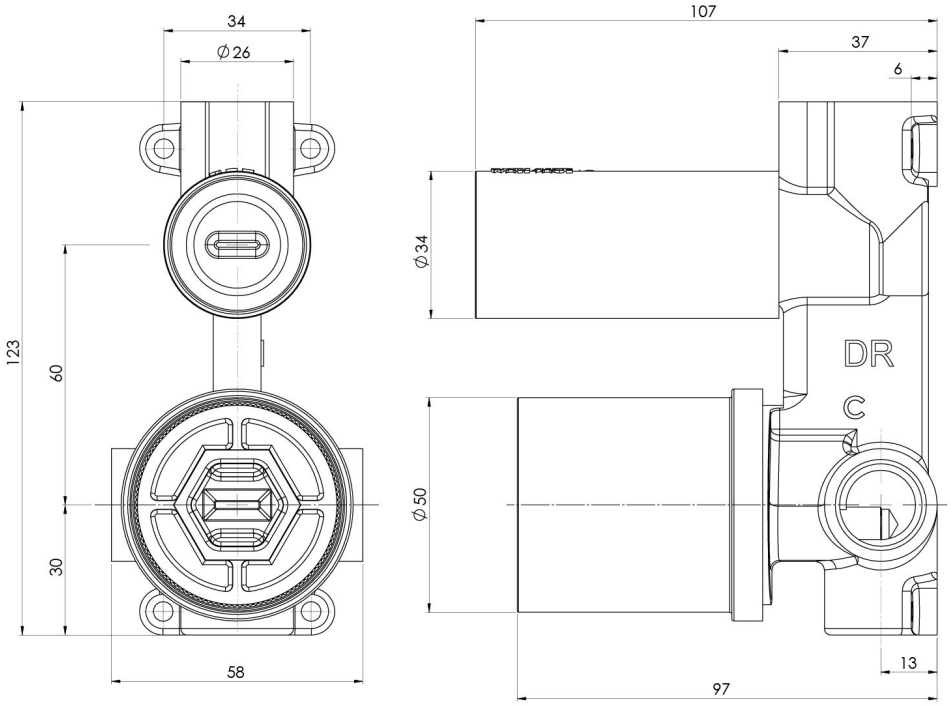

AVAILABLE IN

250-2936-1
Universal

INFORMATION

Temperature Rating
1 - 75°C

Pressure Rating
150 - 500kPa

Lead Free

WATER RATING
www.waterrating.gov.au
N/A
Licence No. 0133

MAINTENANCE AND CARE:

- All surfaces should be cleaned with mild liquid detergent or soap and water.
- Do not use cream cleaners or citrus based cleaning products, as they are abrasive.
- Use of unsuitable cleaning agents may damage the surface.
- Any damage caused in this way will not be covered by warranty.

Product complies with the lead free Australian Building Codes Board regulations in 2026